NEW

(Optional: ABS cover)

Product Size

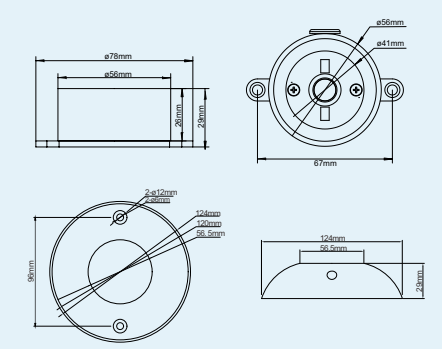

Specification

Model No.:	RS-UW9W316X-B(88186)
Front cover & Housing:	Stainless steel 316L
Dimensions:	D56*H29mm(Optional: ABS cover D124*H29mm)
Tempered Glass:	8mm thickness
LED chip:	Cree
LED Q'ty:	1pc 9W COB
Cable gland:	/
Driver:	Constant current driver
Lens:	/
Beam Angle Options:	120°
Power Cable:	2*1.0mm² VDE rubber cable
Protection Class:	IP68
Environment:	Dry / Submerged
Mounting Hardware:	Surface Mounted System
Net Weight:	0.55kgs with 1.5m cable
Lifetime:	>50000H

Order information

Item code	Color	Light source(w)	Line Way	Input Voltage (v)	Operating current (mA)	Consumption (w)	Luminous (lm)
88186.019.01	2700-3000K	1*9	V+/V-	AC/DC12-24	750 / 375	9	990
88186.019.02	4000-4500K	1*9	V+/V-	AC/DC12-24	750 / 375	9	1035
88186.019.03	5000-5500K	1*9	V+/V-	AC/DC12-24	750 / 375	9	1080
88186.019.04	6000-6500K	1*9	V+/V-	AC/DC12-24	750 / 375	9	1125